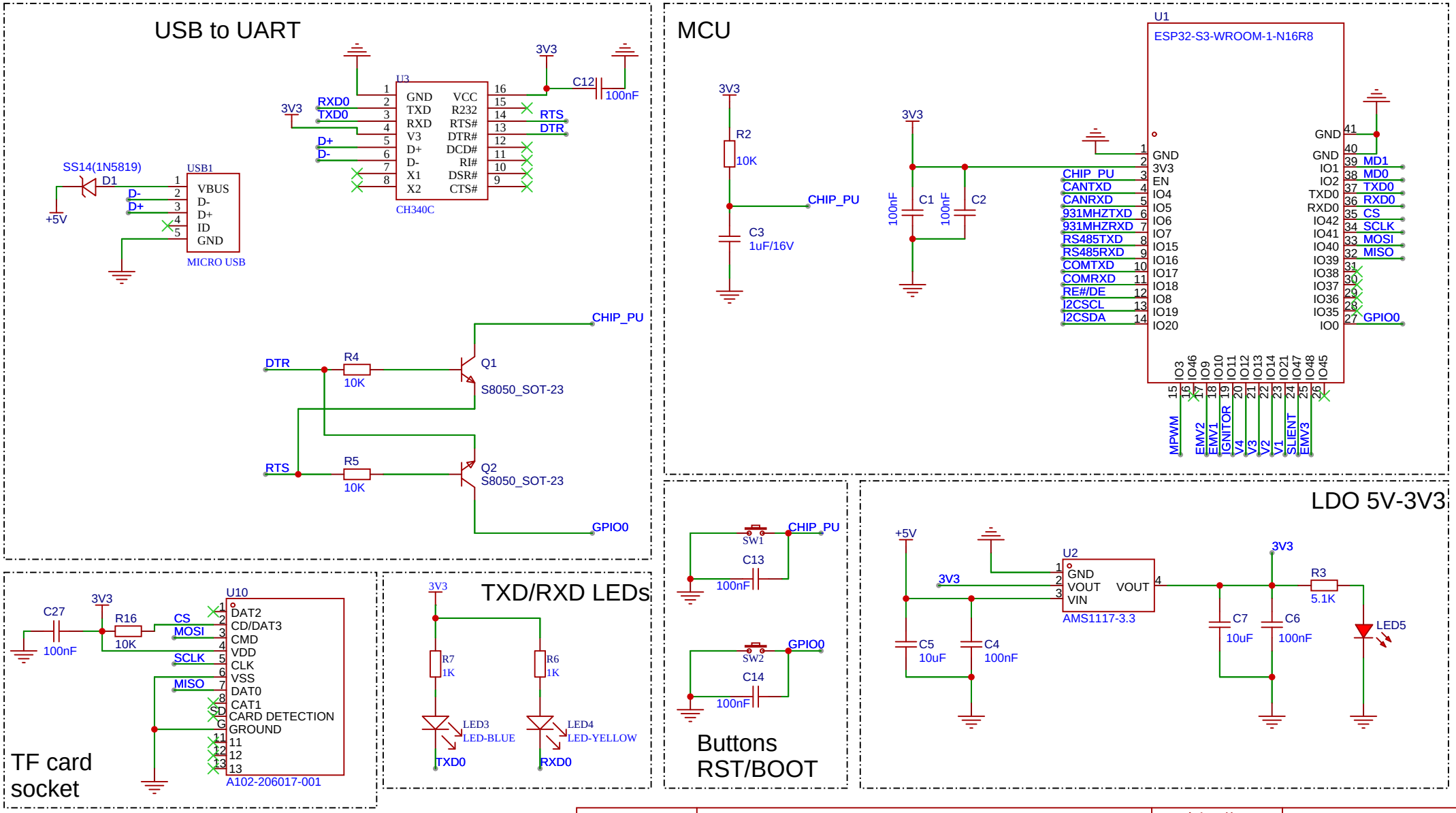

原理图	Schematic V2.1	更新日期	2025-01-15
		创建日期	2024-11-17
图页	ESP32 S3 N16R8	物料编码	
绘制	MackaJunest	Universal_Rocket_Engine_Controller	
审阅	MackaJunest		
		版本	尺寸	页 1 共 2
嘉立创EDA		V1.0	A4	嘉立创EDA

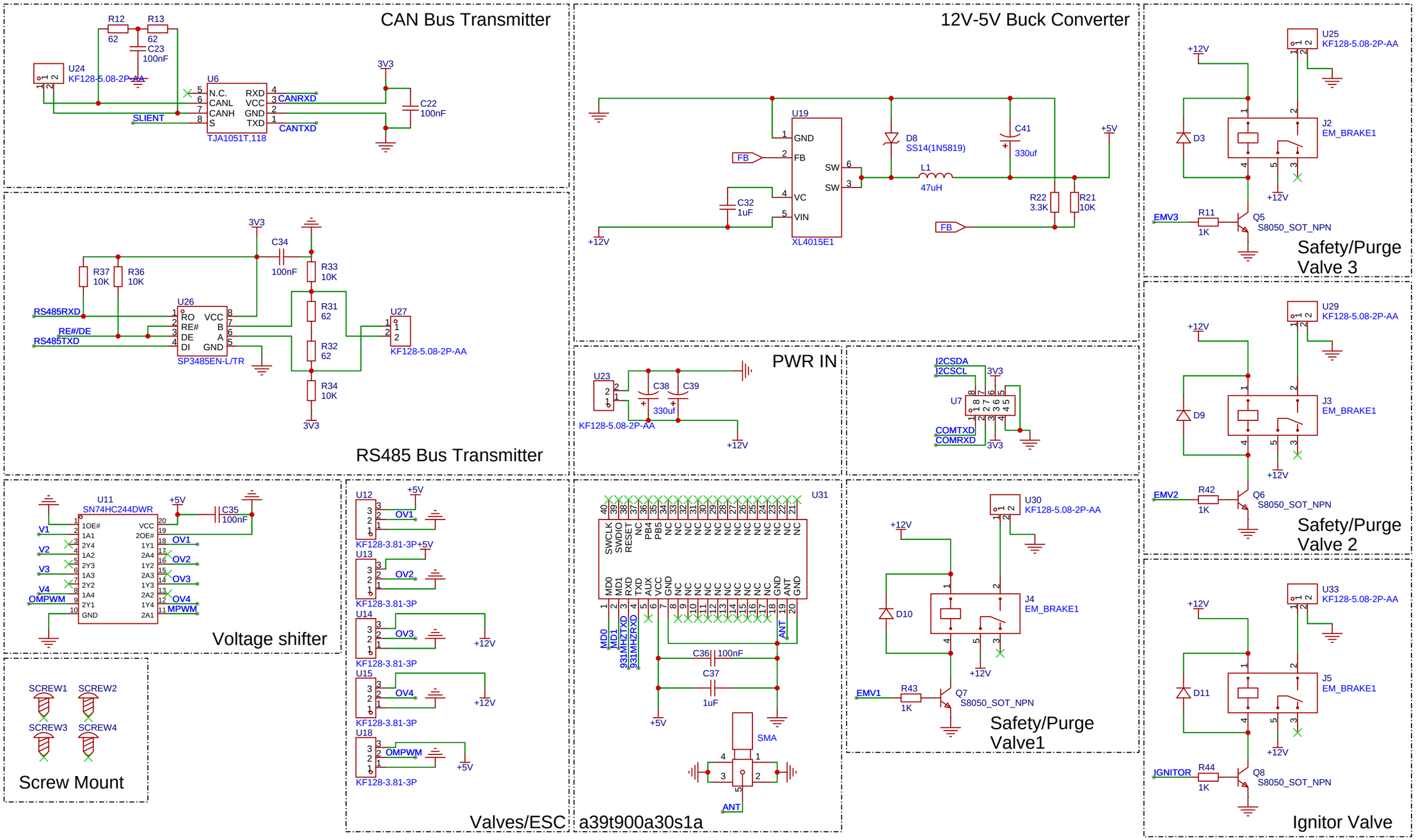
CAN Bus Transmitter
R12 62
R13 62
C23 100nF
U24 KF128-5.08-2P-AA
U6 TJA1051T,118
N.C. CANL CANH S
RXD VCC GND TXD
CANRXD
CANTXD
SLIENT
3V3
C22 100nF
12V-5V Buck Converter
U19 XL4015E1
GND FB SW SW VC VIN
FB
C32 1uF
+12V
D8 SS14(1N5819)
L1 47uH
C41 330uf
+5V
R22 3.3K
R21 10K
U25 KF128-5.08-2P-AA
D3
J2 EM_BRAKE1
EMV3
R11 1K
Q5 S8050_SOT_NPN
Safety/Purge Valve 3
3V3
C34 100nF
R37 10K
R36 10K
R33 10K
R31 62
R32 62
R34 10K
U26 SP3485EN-L/TR
RO RE# DE DI VCC B A GND
RS485RXD
RE#/DE
RS485TXD
U27 KF128-5.08-2P-AA
RS485 Bus Transmitter
PWR IN
U23 KF128-5.08-2P-AA
C38 330uf
C39
+12V
I2CSDA
I2CSCL
U7
COMTXD
COMRXD
U29 KF128-5.08-2P-AA
D9
J3 EM_BRAKE1
EMV2
R42 1K
Q6 S8050_SOT_NPN
Safety/Purge Valve 2
U11 SN74HC244DWR
1OE# 1A1 2Y4 1A2 2Y3 1A3 2Y2 1A4 2Y1 GND
VCC 2OE# 1Y1 2A4 1Y2 2A3 1Y3 2A2 1Y4 2A1
+5V
C35 100nF
V1 V2 V3 V4 OMPWM
OV1 OV2 OV3 OV4 MPWM
Voltage shifter
U12 KF128-3.81-3P
U13 KF128-3.81-3P
U14 KF128-3.81-3P
U15 KF128-3.81-3P
U18 KF128-3.81-3P
OV1 OV2 OV3 OV4 OMPWM
Valves/ESC
U31
SWCLK SWDIO RESET NC PB4 PB5 NC NC NC